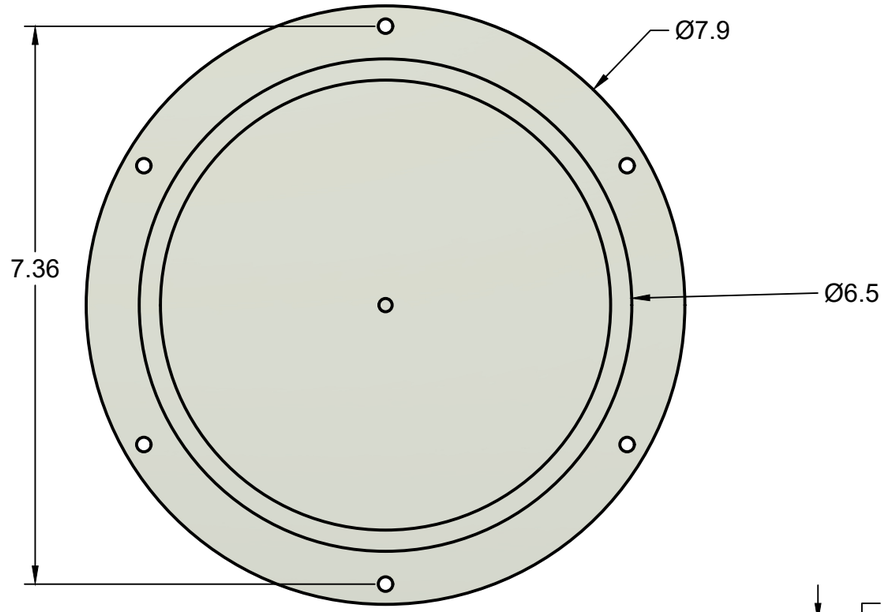



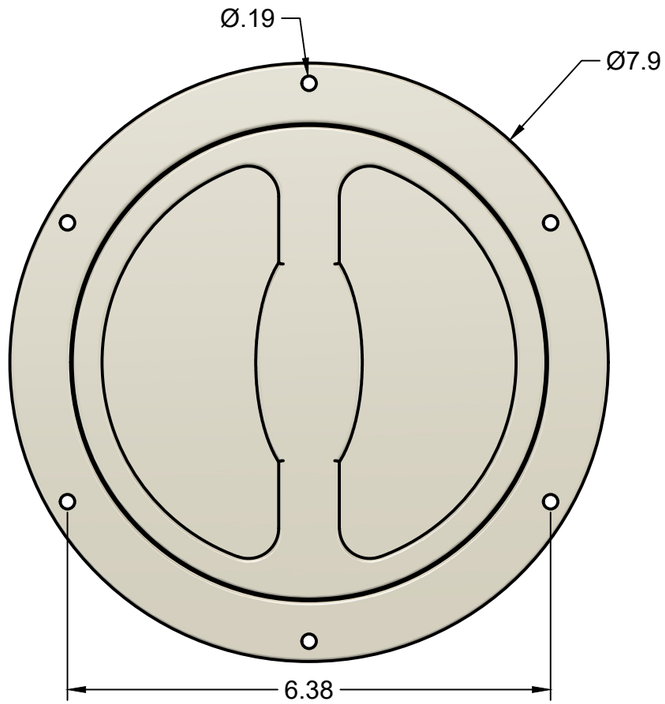

DIMENSION NOTES

ALL DIMENSIONS IN INCHES.

DO NOT SCALE DRAWING.

Use written dimensions; print/display size may vary.

Outside diameter: 7.90

Mounting holes: 6 holes, diameter 0.19

Mounting-hole spacing: see dimensioned views.

Cap locating diameter (fits into tank): 6.50

REQUIRED TANK CUTOUT: DIAMETER 6.60

	PROJECT: Standard billet cap.				
	TITLE:				
APPROVED	SIZE: B	CODE	DWG NO		REV
CHECKED					
DRAWN Paul Revaitis 11/17/2026	SCALE 1:2		WEIGHT	SHEET 1/2	